| Rev. | Change Description | ECN # | Date |
|---|---|---|---|
| | | | |

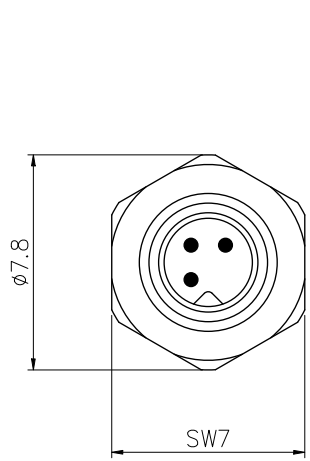


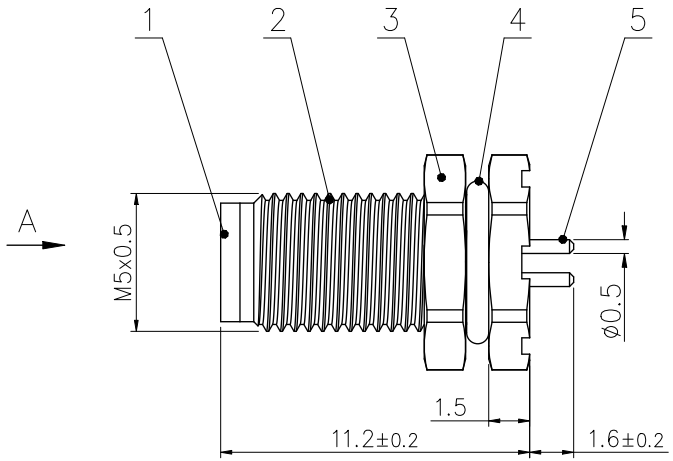


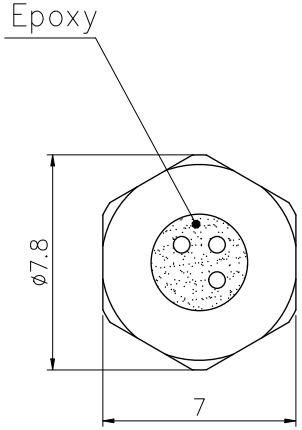


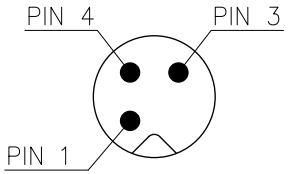


VIWE A

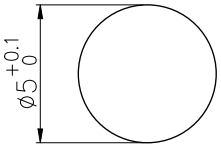


BOARD END HOLE OPENING SIZE

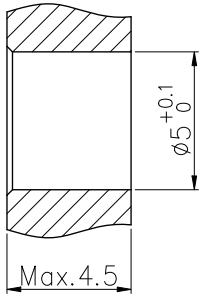


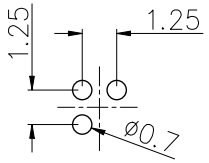


| Technical specifications: | | Materials: | |
|---|---|---|---|
| Coupling: | Threaded coupling | Shell material: | Copper nickel plated |
| Termination: | Dip solder | Contact material: | Copper Gold plated |
| Coding: | | Insert material: | PA66+GF UL94 black |
| Pollution degree: | 3 | Sealing: | Rubber |
| Temperature range: | −40℃ ~ +85℃ | | |
| Degree of protection: | IP67 when mated | | |
| Mating cycles: | ≥500 | | |
| Rated voltage: | 60V AC/DC | | |
| Rated current: | 1A | | |
| Contact resistance: | ≤5 mΩ | | |
| Insulation resistance: | ≥100 MΩ | | |
| All materials are RoHS compliant | | | |

| No. | Specification | Unit | Q'ty |
|---|---|---|---|
| 5 | M5 Male contact pin, brass gold plated | pc | 3 |
| 4 | Rubber ø5X0.8 black | pc | 1 |
| 3 | Hexagon nut M5X0.5, brass nickel plated | pc | 1 |
| 2 | M5 Panel back mount male socket shell, brass nickel plated | pc | 1 |
| 1 | M5 Male Insulator 3 core, PA+GF black | pc | 1 |

| GENERAL TOLERANCE (UNLESS SPECIFIED) | | | | | | |
|---|---|---|---|---|---|---|
| ≤10 ±0.1<br><10~≤20 ±0.2<br><20~≤50 ±0.5<br>Angle ±1° | DWN | W.M 2025.1.6 | | CAZN® 正成 | | |
| | CHK | | | | | |
| | APVD | | | TITLE | M5 Male Back Mount Socket 3 Core | |
| THIRD ANGLE | UNIT | MM | REV A | PART NO | C110201-00011 | |
| | SIZE | A4 | SHEET 1 OF 1 | DRAWING NO | M5-P3-GPFM5 | |